Minimoog service manual errata

Figure 9-17 (Interconnecting Wiring Diagram)
No osc modulation switch included in drawing

"Actave" Adj instead of Octave Adj on Board No. 1

Error on decay switch (LHC) schematic showing pin 10 going to pin 2 of switch.
Pin 10 actually goes to pin 3 of switch.
See diagram.

Figure 9-7 (Contour Generator and Keyboard No. 2 Schematic Diagram)
PL-1 / SO-4 connections for board 2 indicate pin 9. Should be pin 1.
PL-1 / SO-4 connections for board 2 indicate Pin 5 not used.
In earlier models it's tied to pin 6.

Changes regarding oscillator range switches.
1st edition: 10 ohm resistors, no current loop resistor, no buffer board, old VCOs
2nd edition: 1K ohm resistors, 90.9 ohm current loop resistor, no buffer board, old VCOs
3rd edition: 1K ohm resistors, 90.9 ohm current loop resistor, buffer board, old VCOs
4th edition: 1K ohm resistors, no current loop resistor, buffer board, new VCOs

Rectifier board
Capacitor C1 and C2 labels swapped on some rectifier board pictorial / parts placements.

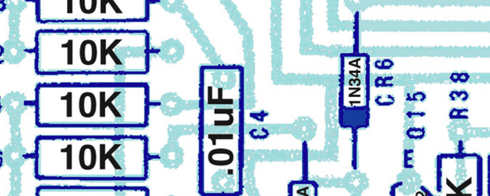

R34 IS 5.1K ON EARLY UNITS. REPLACE WITH 100K AND ADD C13.
R64,R65 AND C13 NOT PRESENT ON EARLIER UNITS. ADD ALL.
C8 NOT PRESENT ON SOME EARLY UNITS. ADD 100PF.
100PF CAPS ADDED ON SOME UNITS NEAR R62 AND R63.
C11 AND C12 ADDED ON SOME UNITS NEAR R50 AND Q21.
R62 IS 100 OHMS ON VERY EARLY UNITS

TO FIX VCF ENV ATTACK UNDERSHOOT, REPLACE R13 WITH SELECTED RESISTOR (~3.7K) OR REPLACE R12 WITH 25K TRIMMER
TO ADD ADJUSTABLE KEY CURRENT (SCALING), REPLACE R1 WITH 560 OHM 1% AND 50 OHM CERMET TRIMMER IN SERIES.
IF GLIDE TIMES UP AND DOWN ARE NOT EQUAL, SELECT R59 VALUE
TO INCREASE GLIDE TIME TO 10 SECS MAX, REPLACE C6 WITH 3.9UF

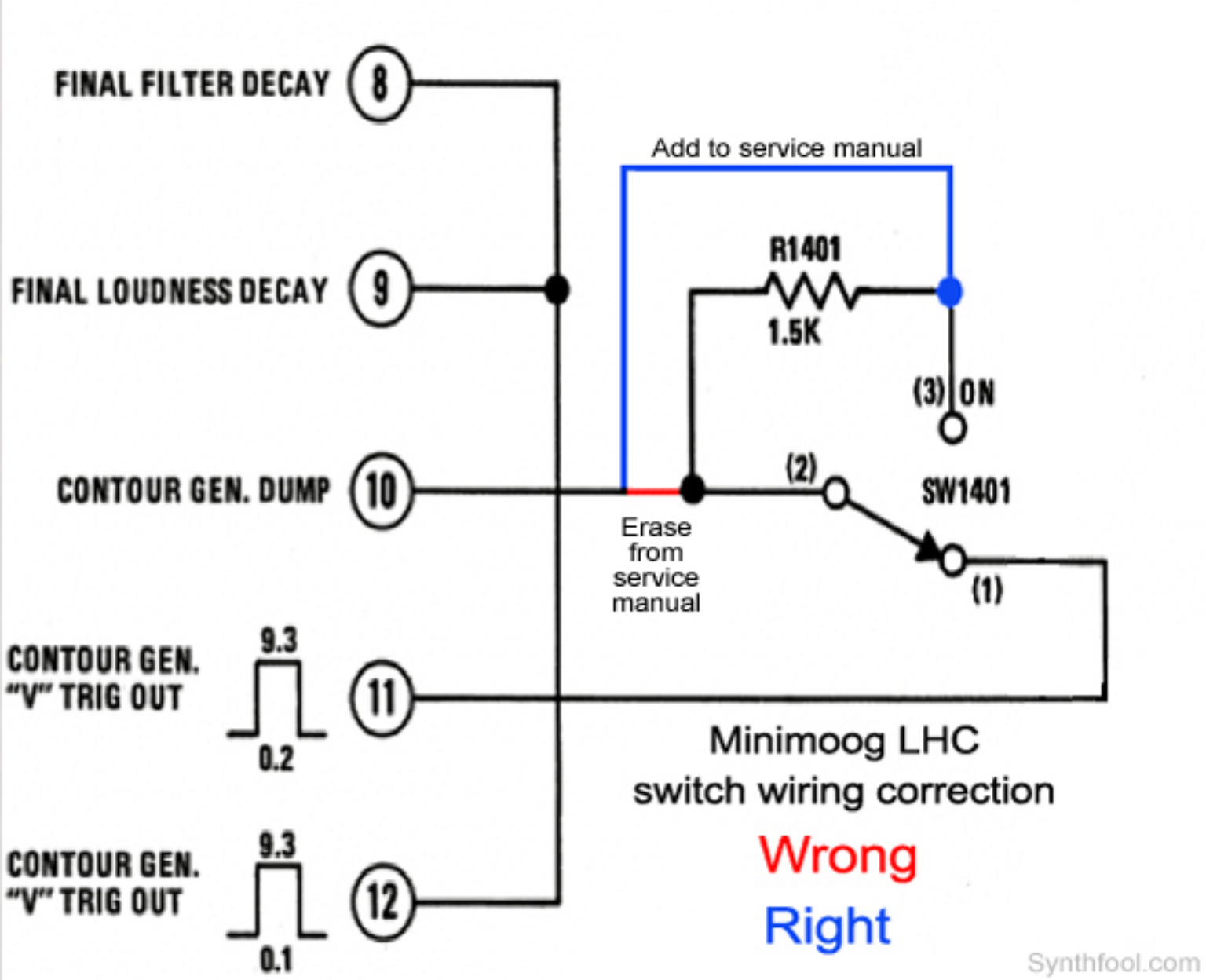
FINAL FILTER DECAY
8
FINAL LOUDNESS DECAY
9
CONTOUR GEN. DUMP
10
CONTOUR GEN.
"V" TRIG OUT
9.3
0.2
11
CONTOUR GEN.
"V" TRIG OUT
9.3
0.1
12
Add to service manual
R1401
1.5K
(3) ON
(2)
SW1401
(1)
Erase
from
service
manual
Minimoog LHC
switch wiring correction
Wrong
Right
Synthfool.com

R39 Changed to 511 ohms on later units

Change R34 to 300 ohms if installing a 20 ohm multiturn for R21

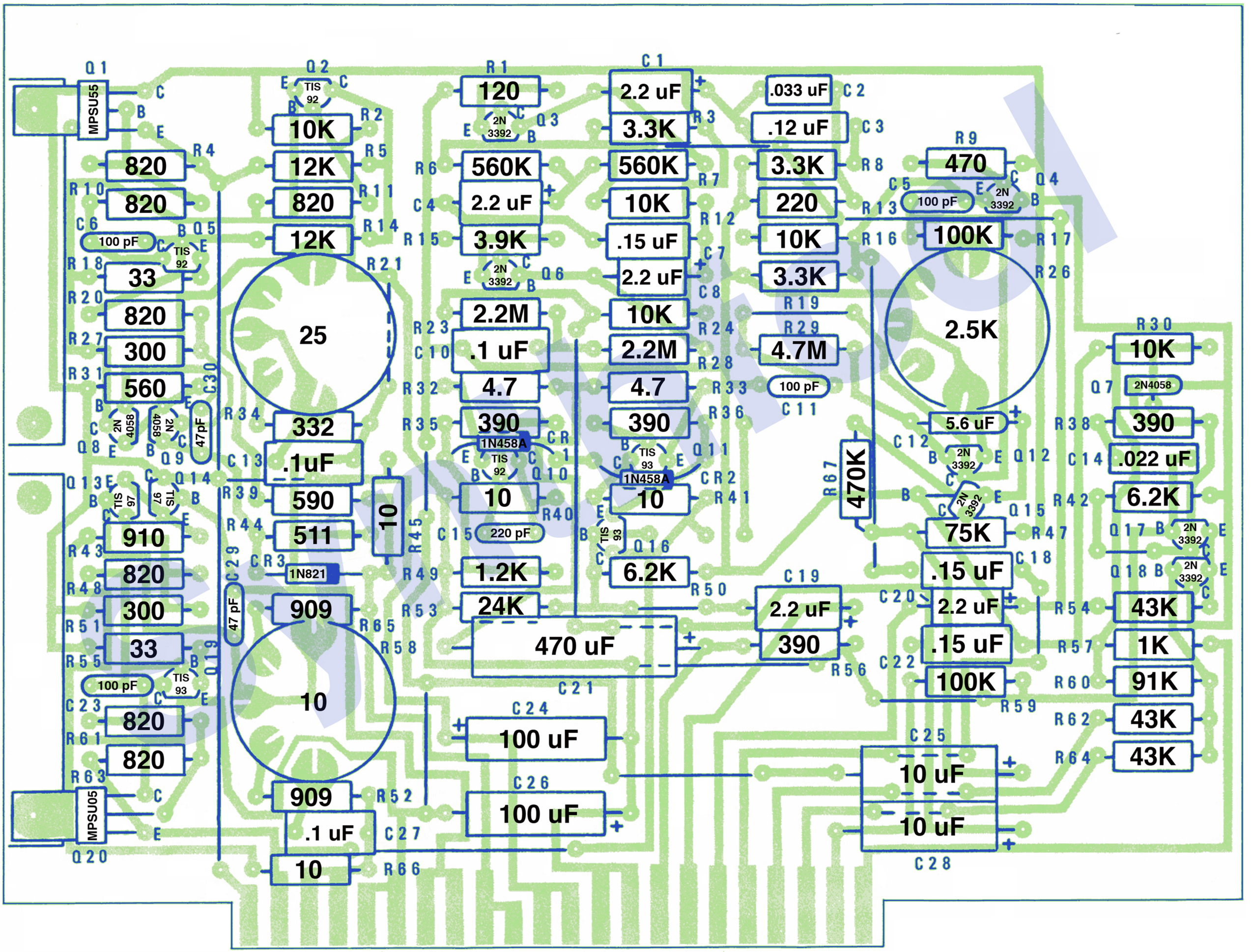

C13 incorrectly marked as .01uf in schematics
R44 shown twice in schematics
R41 (mislabeled as R44) is 10 ohm near Q16

Change R60 for variable modulation depth

Later boards (shown) have noise circuitry changes.
Old boards will have R19 as 6.8megs and other changes around R67.

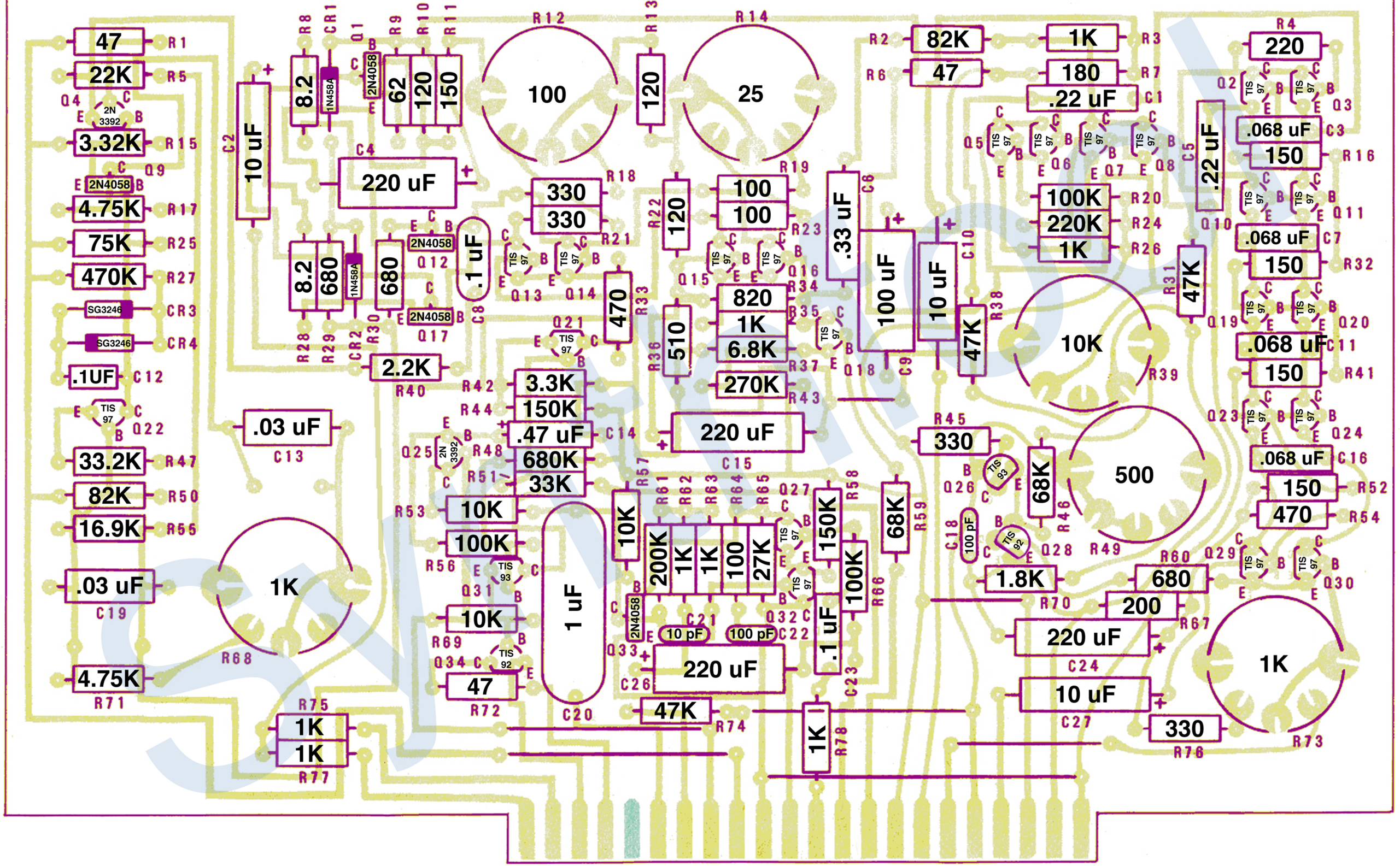

47
22K
3.32K
4.75K
75K
470K
.1UF
33.2K
82K
16.9K
.03 uF
4.75K
10 uF
8.2
1N458A
2N4058
62
120
150
100
120
25
220 uF
330
330
8.2
680
680
.1 uF
2.2K
470
3.3K
150K
.47 uF
680K
33K
10K
100K
10K
47
1 uF
.03 uF
1K
1K
1K
120
100
100
820
1K
6.8K
270K
510
220 uF
10K
200K
1K
1K
100
27K
150K
100K
.1 uF
220 uF
47K
1K
.33 uF
100 uF
10 uF
47K
82K
47
1K
180
.22 uF
100K
220K
1K
10K
330
68K
500
1.8K
680
200
220 uF
10 uF
330
220
.068 uF
150
.22 uF
.068 uF
150
.068 uF
150
.068 uF
150
470
47K
1K